1.DISCUSS THE ROUTING FUNCTION OF NETWORK LAYER.

- **Network Layer has** 2 main functions are ***logical addressing and routing***
- A switch or router needs to be able to look at a destination address and then to determine which of the output ports is the best choice to get a packet to that address. The switch makes this decision by consulting a forwarding table.
- Forwarding consists of taking a packet, looking at its destination address, consulting a table, and sending the packet in a direction determined by that table. Routing is the process by which forwarding tables are built.
- Forwarding is a relatively simple and well-defined process performed locally at a node, whereas routing depends on complex distributed algorithms.
- The forwarding table is used when a packet is being forwarded. a row in the forwarding table contains the mapping from a network prefix to an outgoing interface and some MAC information, such as the Ethernet address of the next hop. The routing table is the table that is built up by the routing algorithms as a precursor to building the forwarding table. It generally contains mappings from network prefixes to next hops.
- The forwarding table needs to be structured to optimize the process of looking up an address when forwarding a packet, while the routing table needs to be optimized for the purpose of calculating changes in topology.
- The forwarding table may be implemented in specialized hardware, whereas this is rarely if ever done for the routing table.

Network Number	Next Hop
18	171.69.245.10

(a)

Network Number	Interface	MAC Address
18	if0	8:0:2b:c4:b:1:2

(b)

Example Rows from (a) Routing and (b) Forwarding Tables

- The routing table tells us that network prefix 18/8 is to be reached by a next hop router with the IP address 171.69.245.10, while the forwarding table contains the information about exactly how to forward a packet to that next hop: Send it out interface number 0 with a MAC address of 8:0:2b:e4:b:1:2.

Network as a Graph

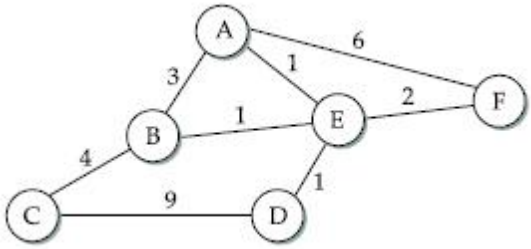

- The nodes of the graph, labeled A through F, may be hosts, switches, routers, or networks. Here let it be routers. The edges of the graph correspond to the network links. Each edge has an associated *cost*, which gives some indication of the desirability of sending traffic over that link.
- The basic problem of routing is to find the lowest-cost path between any two nodes, where the cost of a path equals the sum of the costs of all the edges that make up the path.
- Calculating all the shortest paths and loading them into some nonvolatile storage on each node. Such a static approach has several shortcomings:
    - It does not deal with node or link failures.
    - It does not consider the addition of new nodes or links.
    - It implies that edge costs cannot change
- Routing is achieved by running routing protocols among the nodes. These protocols provide a distributed, dynamic way to solve the problem of finding the lowest-cost path in the presence of link and node failures and changing edge costs.
- The two main classes of routing protocols: ***distance vector*** **and** ***link state.***

2.EXPLAIN DISTANCE-VECTOR ROUTING ALGORITHM

Each node constructs a one-dimensional array (a vector) containing the "distances" (costs) to all other nodes and distributes that vector to its immediate neighbors. The starting assumption for distance-vector routing is that each node knows the cost of the link to each of its directly connected neighbors. These costs may be provided when the router is configured by a network manager. A link that is down is assigned an infinite cost.

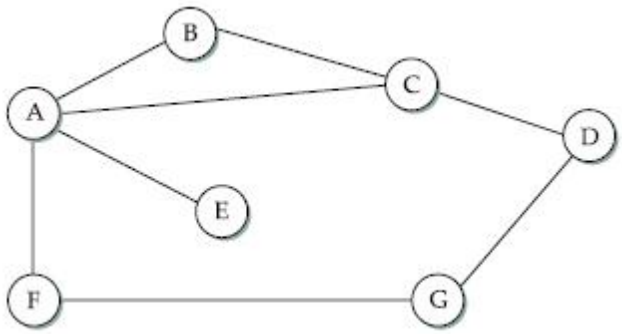

- Ex: the cost of each link is set to 1, so that a least-cost path is simply the one with the fewest hops.

Information Stored at Node	Distance to Reach Node						
	A	B	C	D	E	F	G
A	0	1	1	∞	1	1	∞
B	1	0	1	∞	∞	∞	∞
C	1	1	0	1	∞	∞	∞
D	∞	∞	1	0	∞	∞	1
E	1	∞	∞	∞	0	∞	∞
F	1	∞	∞	∞	∞	0	1
G	∞	∞	∞	1	∞	1	0

Table 4.5 Initial distances stored at each node (global view).

- Each node knows only the information in one row of the table. The global view that is shown above is not available at any single point in the network.

- Initially, each node sets a cost of 1 to its directly connected neighbors and ∞ to all other nodes. Thus, A initially believes that it can reach B in one hop and that D is unreachable. The routing table stored at A reflects this set of beliefs and includes the name of the next hop that A would use to reach any reachable node.

Destination	Cost	Next Hop
B	1	B
C	1	C
D	∞	—
E	1	E
F	1	F
G	∞	—

Table 4.6 Initial routing table at node A.

- The next step in distance-vector routing is that every node sends a message to its directly connected neighbors containing its personal list of distances. For example, node F tells node A that it can reach node G at a cost of 1; A also knows it can reach F at a cost of 1, so it adds these costs to get the cost of reaching G by means of F. This total cost of 2 is less than the current cost of infinity, so A records that it can reach G at a cost of 2 by going through F.
- Similarly, A learns from C that D can be reached from C at a cost of 1; it adds this to the cost of reaching C (1) and decides that D can be reached via C at a cost of 2, which is better than the old cost of infinity.
- At the same time, A learns from C that B can be reached from C at a cost of 1, so it concludes that the cost of reaching B via C is 2. Since this is worse than the current cost of reaching B (1), this new information is ignored.
- The process of getting consistent routing information to all the nodes is called ***convergence.***

Destination	Cost	Next Hop
B	1	B
C	1	C
D	2	C
E	1	E
F	1	F
G	2	F

Table 4.7 Final routing table at node A.

Information Stored at Node	Distance to Reach Node						
	A	B	C	D	E	F	G
A	0	1	1	2	1	1	2
B	1	0	1	2	2	2	3
C	1	1	0	1	2	2	2
D	2	2	1	0	3	2	1
E	1	2	2	3	0	2	3
F	1	2	2	2	2	0	1
G	2	3	2	1	3	1	0

Table 4.8 Final distances stored at each node (global view).

3. ELABORATE ON LINK STATE ROUTING ALGORITHM

- Link-state routing is the second major class of intradomain routing protocol. The starting assumptions for link-state routing are that each node is assumed to be capable of finding out the state of the link to its neighbors (up or down) and the cost of each link.
- Every node knows how to reach its directly connected neighbors, and if the totality of this knowledge is disseminated to every node, then every node will have enough knowledge of the network to build a complete map of the network. Thus, link state routing protocols rely on two mechanisms: **reliable dissemination of link-state information**, and the **calculation of routes from the sum of all the accumulated link-state knowledge**.
- **Reliable Flooding:** It is the process of making sure that all the nodes participating in the routing protocol get a copy of the link-state information from all the other nodes. The basic idea is for a node to send its link-state information out on its entire directly connected links; each node that receives this information then forwards it out on all of *its*

links. This process continues until the information has reached all the nodes in the network.

- Each node creates an update packet, also called a ***link- state packet*** **(LSP),** which contains the following information:
    - The ID of the node that created the LSP
    - A list of directly connected neighbors of that node, with the cost of the link to each one
    - A sequence number
    - A time to live for this packet

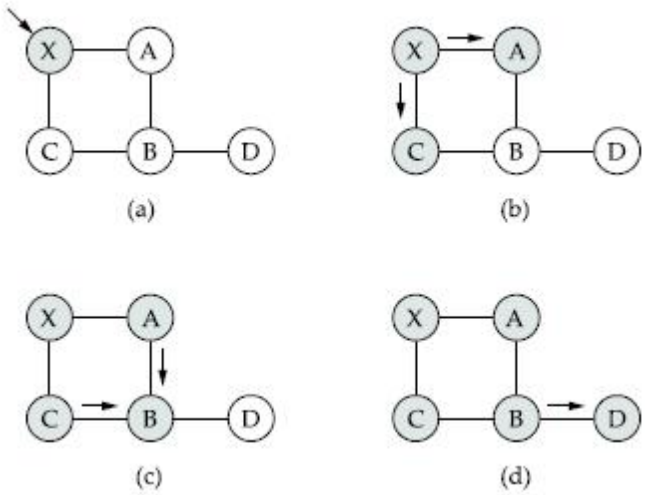

- In Figure (a) the LSP arrives at node X, which sends it to neighbors A and C in Figure (b). A and C do not send it back to X, but send it on to B. Since B receives two identical copies of the LSP, it will accept whichever arrived first and ignore the second as a duplicate. It then passes the LSP onto D, which has no neighbors to flood it to, and the process is complete.
- Each node generates LSPs under two circumstances. Either the expiry of a periodic timer or a change in topology can cause a node to generate a new LSP.
- Important design goals of a link-state protocol's flooding mechanism is that the newest information must be flooded to all nodes as quickly as possible, while old information must be removed from the network and not allowed to circulate. In addition, it desirable to minimize the total amount of routing traffic that is sent around the network (overhead).

- **Advantages:** Stabilize quickly, it does not generate much traffic, and it responds rapidly to topology changes or node failures.
- **Disadvantage:** the amount of information stored at each node (one LSP for every other node in the network) can be quite large.

4.CALCULATE THE SHORTEST DISTANCE USING LINK STATE ALGORITHM FOR THE FOLLOWING NETWORK GRAPH.

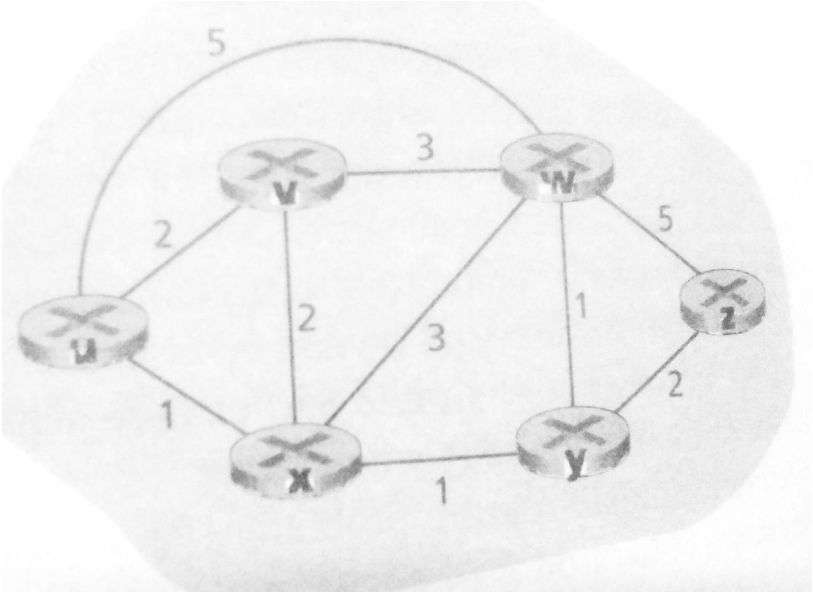

Calculate the distance from node u to node w through different paths

1.Path from u through v

2.Path from u through x

3.path through u through x,y

step	N'	D(v),p(v)	D(w),p(w)	D(x),p(x)	D(y),p(y)	D(z),p(z)
0	u	2,u	5,u	1,u	∞	∞
1	ux	2,u	4,x		2,x	∞
2	uxy	2,u	3,y			4,y
3	uxyv		3,y			4,y
4	uxyvw					4,y
5	uxyvwz					

Shortest path is path through uxy to w.

```
Initialization:
  N' = {u}
  for all nodes v
    if v is a neighbor of u
      then D(v) = c(u,v)
    else D(v) = ∞

Loop
  find w not in N' such that D(w) is a minimum
  add w to N'
  update D(v) for each neighbor v of w and not in N':
        D(v) = min( D(v), D(w) + c(w,v) )
  /* new cost to v is either old cost to v or known
   least path cost to w plus cost from w to v */
until N'= N
```

5.DISCUSS ABOUT SHORTEST-PATH ROUTING (DIJKSTRA'S SHORTEST-PATH ALGORITHM)

Each switch maintains two lists, known as ***Tentative and Confirmed***. Each of these lists contains a set of entries of the form (Destination, Cost, NextHop).

- Ex:

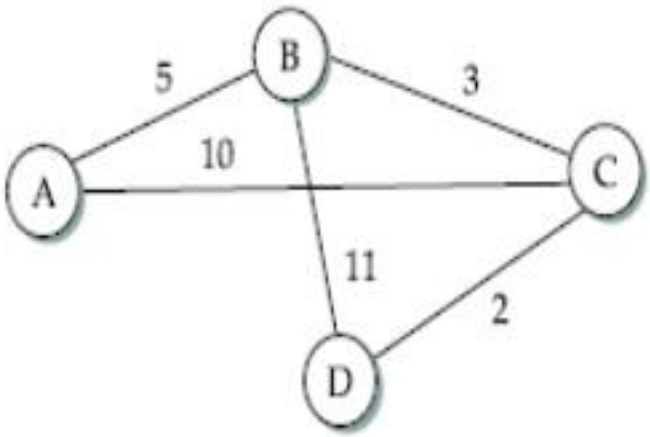

The algorithm works as follows:

1. Initialize the Confirmed list with an entry (initially : root node); this entry has a cost of 0.

2. For the node just added to the Confirmed list in the previous step, select its LSP.

3. For each neighbor of the node just added to the Confirmed list, calculate the cost to reach this neighbor as the sum of the cost from the root node to the newly added node in the confirmed list and from that node to neighbor.

(a) If neighbor is currently on neither the Confirmed nor the Tentative list, then add (Neighbor, Cost, NextHop) to the Tentative list

(b) If neighbor is currently on the Tentative list, and the cost is less than the currently listed cost for neighbor, then replace the current entry with (Neighbor, Cost, NextHop).

4. If the Tentative list is empty, stop. Otherwise, pick the entry from the Tentative list with the lowest cost, move it to the Confirmed list, and return to step 2.

Step	Confirmed	Tentative	Comments
1	(D,0,-)		Since D is the only new member of the confirmed list, look at its LSP.
2	(D,0,-)	(B,11,B) (C,2,C)	D's LSP says we can reach B through B at cost 11, which is better than anything else on either list, so put it on Tentative list; same for C.
3	(D,0,-) (C,2,C)	(B,11,B)	Put lowest-cost member of Tentative (C) onto Confirmed list. Next, examine LSP of newly confirmed member (C).
4	(D,0,-) (C,2,C)	(B,5,C) (A,12,C)	Cost to reach B through C is 5, so replace (B,11,B). C's LSP tells us that we can reach A at cost 12.
5	(D,0,-) (C,2,C) (B,5,C)	(A,12,C)	Move lowest-cost member of Tentative (B) to Confirmed, then look at its LSP.
6	(D,0,-) (C,2,C) (B,5,C)	(A,10,C)	Since we can reach A at cost 5 through B, replace the Tentative entry.
7	(D,0,-) (C,2,C) (B,5,C) (A,10,C)		Move lowest-cost member of Tentative (A) to Confirmed, and we are all done.

6.DISCUSS THE DIFFERENT CLASSIFICATION OF ROUTING PROTOCOL

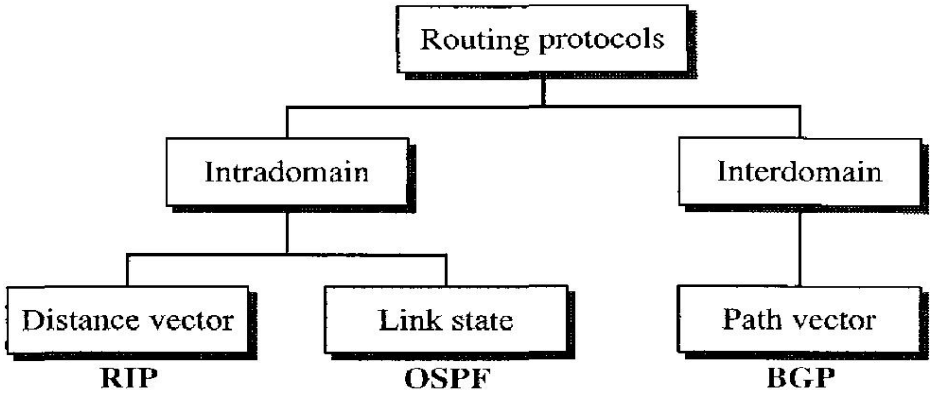

INTRA AS- ROUTING PROTOCOL

An intra-AS routing protocol is used to determine how routing is performed within an autonomous system (AS).Intra AS routing protocols are also known as interior gateway protocols.Two routing protocols have been used extensively for routing within an autonomous system in the internet,the Routing Information Protocol (RIP) and Open Shortest Path First(OSPF).

7.ELABORATE ON RIP(ROUTING INFORMATION PROTOCOL)

RIP is a distance vector protocol that operates in a manner very close to the idealized DV protocol.RIP uses the term hop which is the number of subnets traversed along the shortest path from source router to destination subnet.Figure 1., illustrates an AS with six leaf subnets.The maximum cost of a path is limited to 15 thus limiting the use of RIP to autonomous systems that are fewer than 15 hops in diameter.In DV protocols neighbouring routers exchange distance vectors with each other.In the figure lines connecting the routers denote subnets,Only selected routers A,B,C,D and subnets w,x,y,z are labelled.Dotted lines indicate that the AS continues on,thus this autonomous system has many more routers and linkers.Each router maintains a RIP table known as routing table.

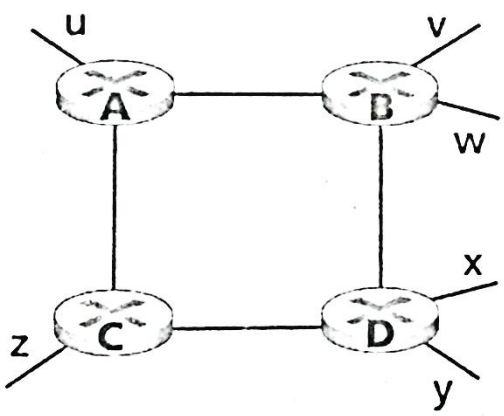

Destination	Hops
u	1
v	2
w	2
x	3
y	3
z	2

Figure 2. is the Routing table for router D.

Destination Subnet	Next Router	Number of Hops to Destination
w	A	2
y	B	2
z	B	7
x	—	1
....	....	....

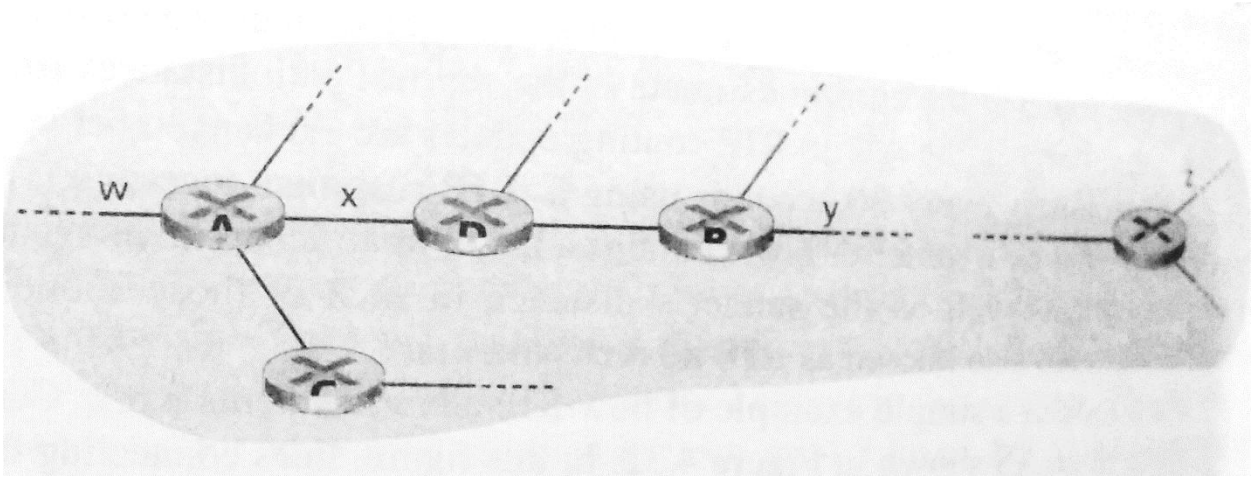

Figure 3.Portion of an autonomous system

Destination Subnet	Next Router	Number of Hops to Destination
z	C	4
w	—	1
x	—	1
....	....	....

Figure 5.Advertisement from Router A

- RIP is a distance vector protocol that operates in a manner very close to the idealized DV protocol.RIP uses the term hop which is the number of subnets traversed along the shortest path from source router to destination subnet.The maximum cost of a path is limited to 15 thus limiting the use of RIP to autonomous systems that are fewer than 15 hops in diameter.Each router maintains a RIP table known as routing table.In RIP routing updates are send using RIP response messages which are also known as advertisements

Destination Subnet	Next Router	Number of Hops to Destination
w	A	2
y	B	2
z	A	5
....	....	....

Fig Routing table in D after receiving advertisement from router A.advertisement

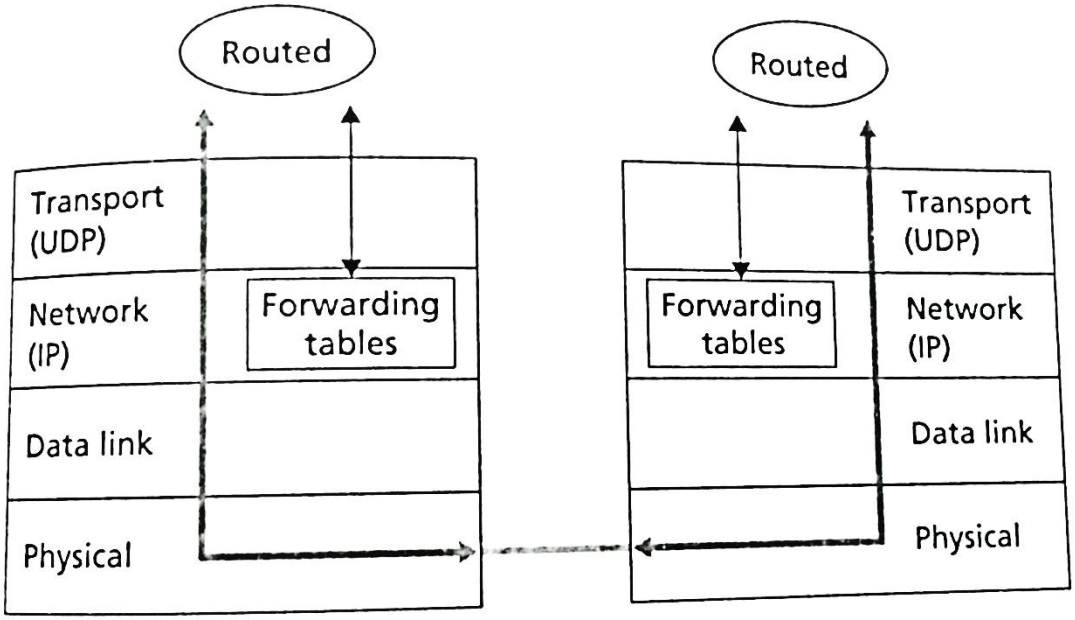

8 EXPLAIN OSPF.

Open – nonproprietary standard and *SPF* - alternative name for link state routing.Link state protocol that uses flooding of link state information and Dijkstra least cost path algorithm.In OSPF router broadcasts information to all other routers not only to its neighboring routers

Advantages of OSPF

- Security
- Multiple same cost paths
- Integrated support for unicast and multicast routing
- Support for hierarchy within a single routing domain

Hierarchy structured OSPF with four areas

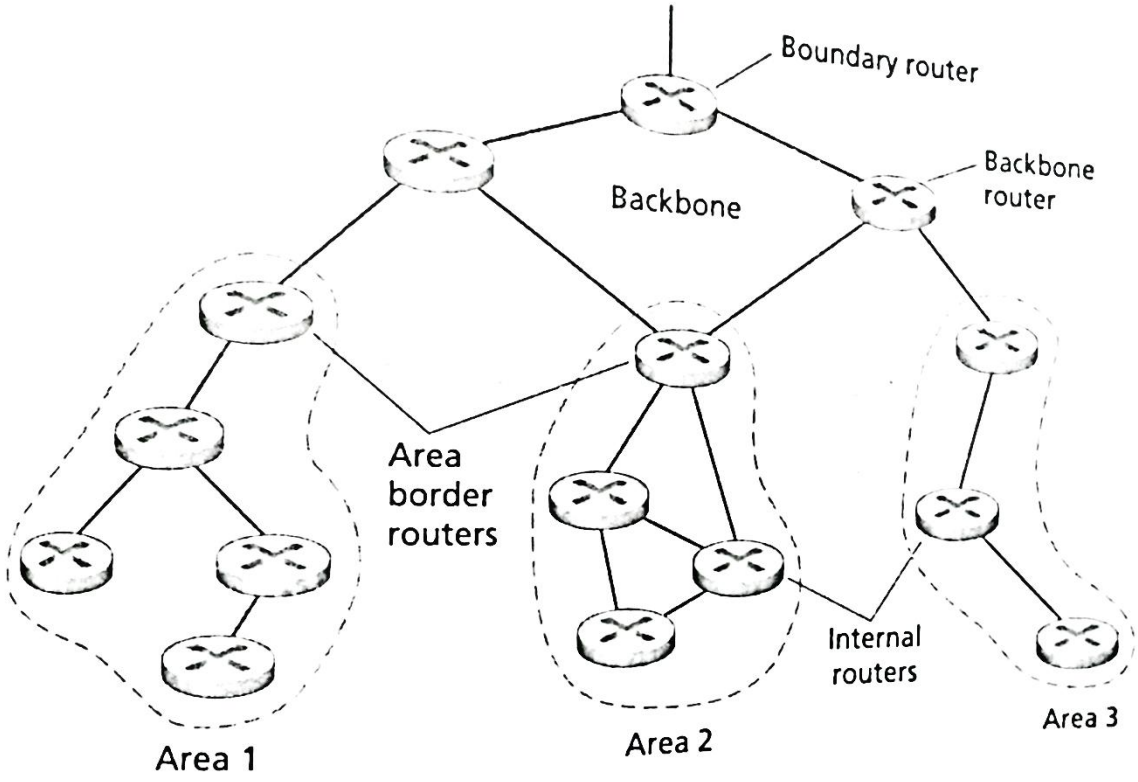

- **Internal Routers:** routers in nonbackbone areas and perform only intra-AS routing
- **Area border routers:** these routers belong to both an area and the backbone
- **Backbone routers(nonborder routers):**routers perform routing within the backbone but themselves are not area border routers
- **Boundary routers:** Exchanges routing information with routers belonging to other autonomous systems

9.DISCUSS ON BGP BORDER GATEWAY PROTOCOL

Border Gateway Protocol (BGP) is an interdomain routing protocol or Inter AS routing Protocol using path vector routing.BGP provides AS(Autonomous Subsytem) a means to Obtain subnet reachability **information from neighbouring AS**.Propagate reachability information to **all routers internal to AS**.**Determine good routers to subnets** based on reachability information and AS policy

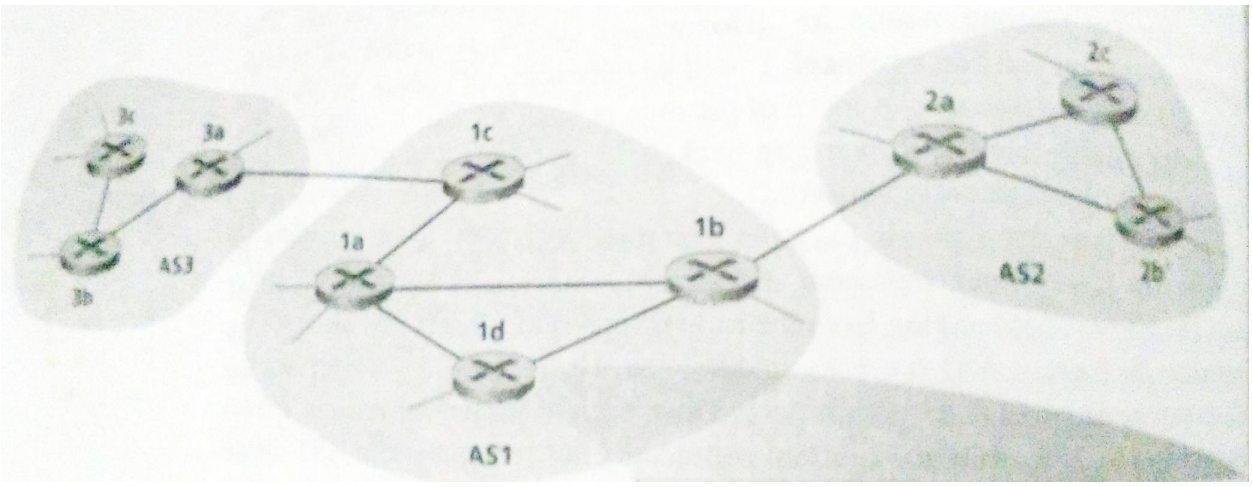

In BGP autonomous system identified by a globally unique autonomous system number(ASN)

Fig.External BGP(eBGP) and Internal BGP(iBGP) sessions connecting AS

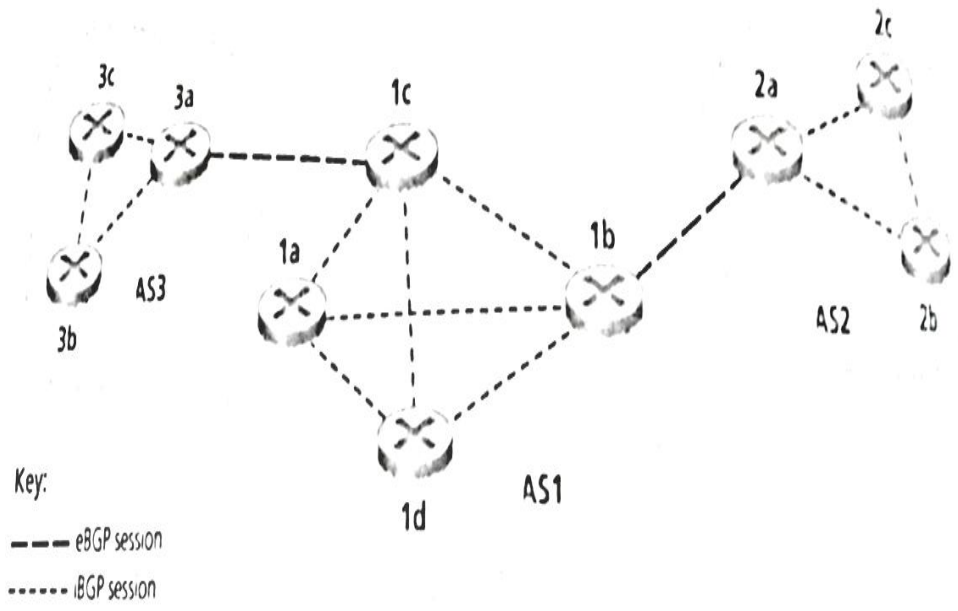

- In BGP pair of routers exchange routing information over semi permanent TCP connection .eBGP session is connection that spans two AS systems eg long dashes used between 3a and 1c.iBGP is BGP session between routers in same AS eg short dashes between 1a and 1d .Using eBGP session between gateway router 3a and 1c ,AS3 sends AS1 the list of prefixes that are reachable from AS3 and AS1 sends the list of prefixes that are reachable from AS1.Similarly AS1 and AS2 exchange prefix information using gateway routers 1b and 2a.

TWO IMPORTANT ATTRIBUTES USED BY BGP PEER

- AS path
- Next HOP

BGP ROUTE SELECTION

- Routes are assigned a local preference value as one of their attributes
- From remaining routes ,the route with the shortest AS-PATH is selected
- From the remaining routes,the routes with the closest NEXT-HOP router is selected
- If more than one route still exists the router uses BGP identifiers to select the route

ROUTING POLICY

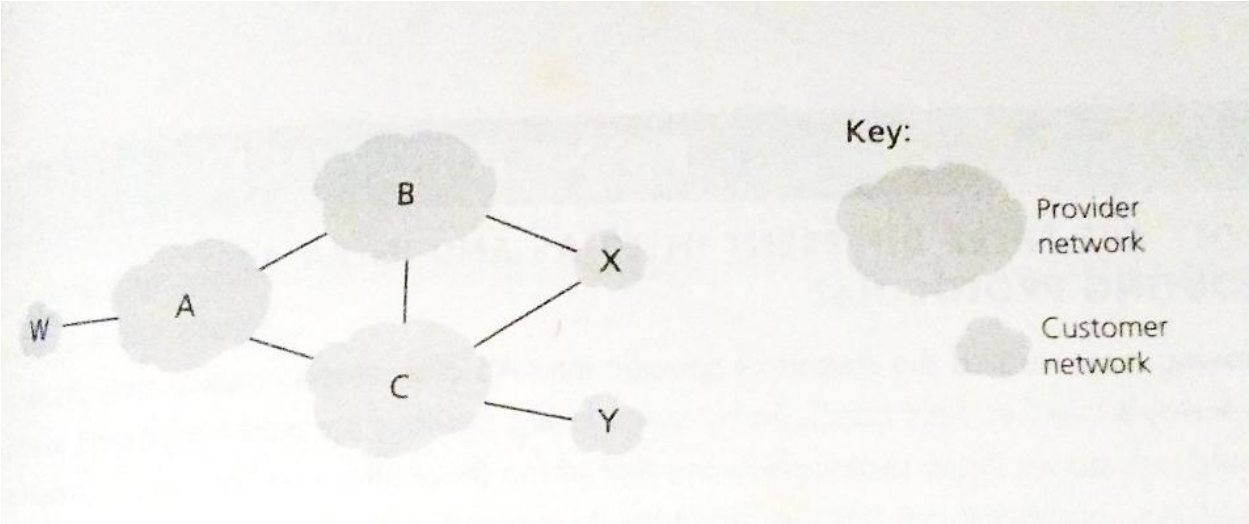

STUB NETWORK

- All traffic entering a stub network must be destined for that network and all traffic leaving a stub network must have originated in that network.Eg multihomed stub network is connected to rest of network via two different providers.It function as stub network when it advertises that it has no path to its neighbours B and C except itself

10.LIST DIFFERENT TYPES OF ROUTING

- In **normal routing or unicasting** packets are transmitted from a **sender to a single receiver**
- In **broadcast routing** the network layer provides a **service of delivering a packet sent from a source node to all other nodes in the network**
- In **multicast routing single source node sent a copy of a packet to a subnet of the other network nodes**

11. EXPLAIN DIFFERENT TYPES OF BROADCASTING

1. N way unicast
2. Uncontrolled flooding
3. Controlled flooding

a) Sequence no controlled flooding
b) Reverse path forwarding
c) Spanning tree algorithm

N WAY UNICAST

- Here as **source node is connected to the rest of network via a single link, then N separate copies of same packet will traverse this single link**

UNCONTROLLED FLOODING

- Source node **sends a copy of packet to all of its neighbours** R2 will flood to R3, R3 will flood to R4,R4 will flood to R2, and R2 will flood to R3 and soon.**Endless cycling of two broadcast packets clockwise and anticlockwise**.

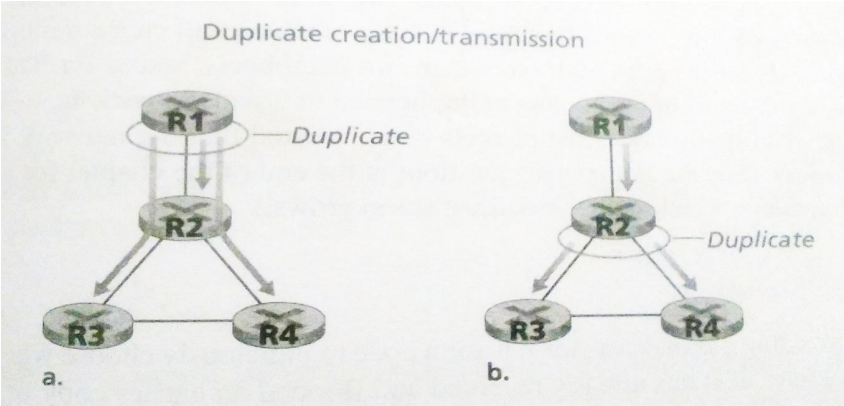

12, DETAIL ON DIFFERENT TYPES OF CONTROLLED FLOODING

Key to avoid broadcast storm is for a node to choose when to flood a packet and when not to flood

- **Sequence number controlled flooding**

➢ Source node puts its address as well as a broadcast number

➢ Each node maintains a list of source address and sequence no of each broadcast packet it has already received, duplicated and forwarded

➢ So drops the packet already received

- **Reverse path forwarding(RPF)**

  Only know the next neighbor on its unicast shortest path to the sender.Broadcast packet on all of its outgoing links.Uses neighbor identity only to determine whether or not to flood a received broadcast packet

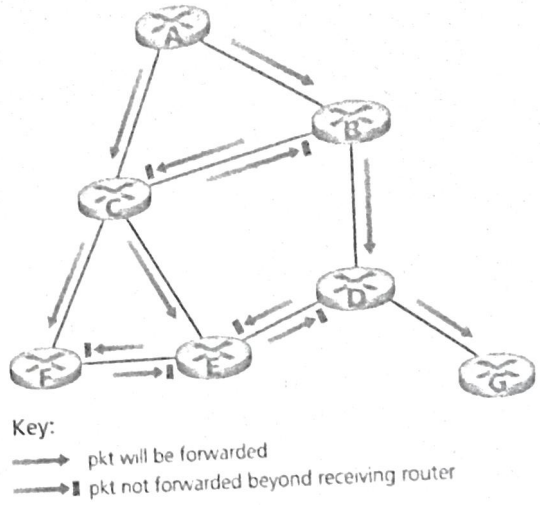

Figure 4.41 ♦ Reverse path forwarding

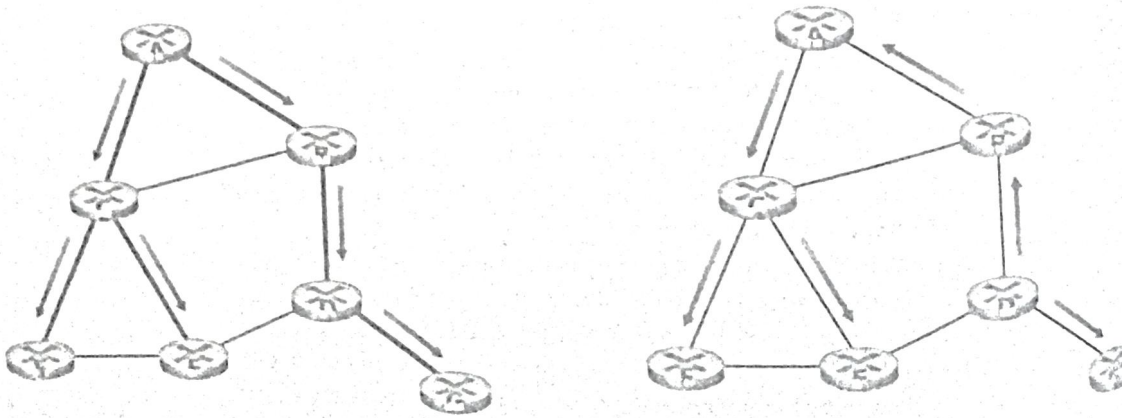

Packet broadcasting

Broadcast is initiated at from A to C and B and from B to C and D.C ignore packet from B and receive directly from A as its **shortest path,**From C its broadcasted to B, E and F.

SPANNING TREE BROADCAST

- When a source node wants to send a broadcast packet it **send the packet out on all of the incident links that belong to spanning tree**
- Spanning tree used by any node to broadcast
- **Broadcast packets to all neighbours except from one its received**

Step wise construction of spanning

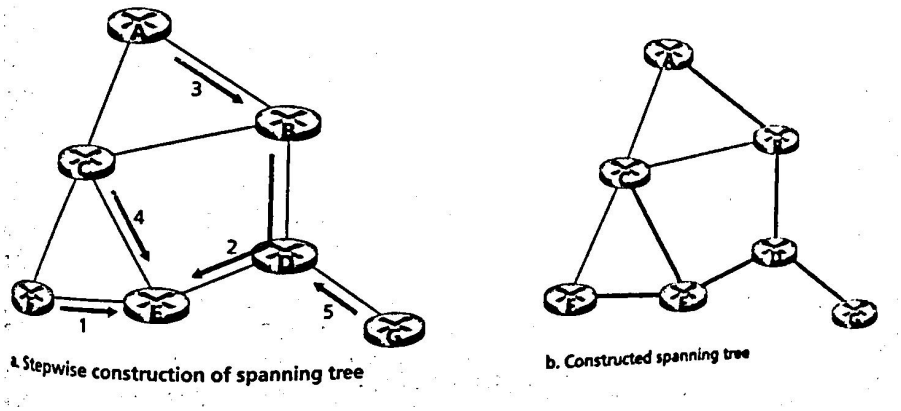

a. Stepwise construction of spanning tree

b. Constructed spanning tree

tree

Figure represents a multicasting scenario in which a single sender transmits packet to a group of
subnets

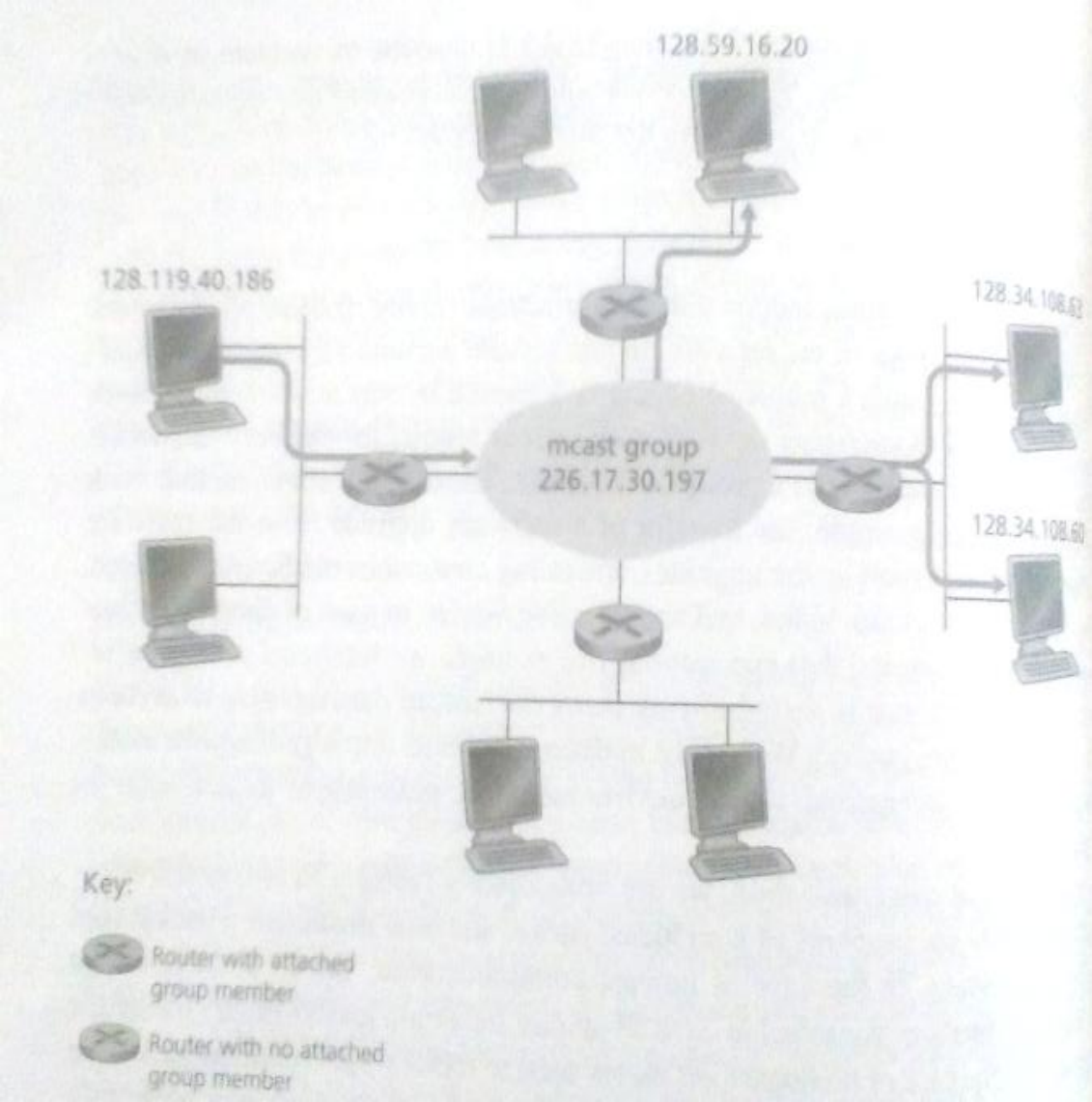

13. ELABORATE ON INTERNET GROUP MANAGEMENT/MEMBERSHIP PROTOCOL(IGMP)

The **Internet Group Management Protocol (IGMP)** is one of the necessary, but not sufficient,protocols that is involved in multicasting. IGMP is a companion to the IP protocol.IGMP is not a multicasting routing protocol; it is a protocol that manages group membership. In any network, there are **one or more multicast routers that distribute multicast packets to hosts or other routers**. The IGMP protocol **gives the multicast routers information about the membership status of hosts (routers) connected** to the network. A **multicast router may receive thousands of multicast packets every day for different groups**. If a router has no knowledge about the membership status of the hosts, it must broadcast all these packets. This creates a lot of traffic and consumes bandwidth. A better solution is to keep a list of groups in the network for which there is at least one loyal member. **IGMP helps the multicast router create and update this list.**IGMP protocol operates between a host and its directly attached router

- IGMP has only three message types

✓ Membership query

✓ Membership report

✓ Leave group

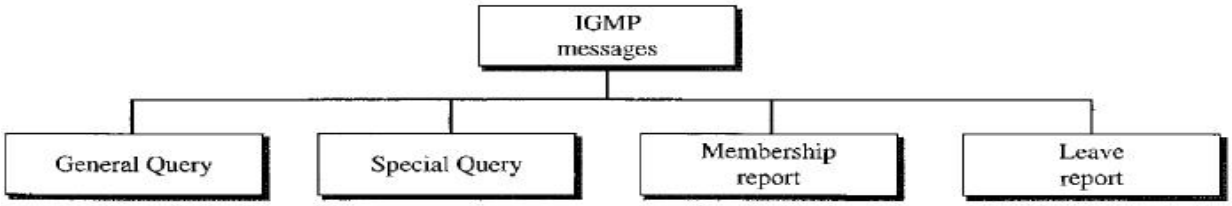

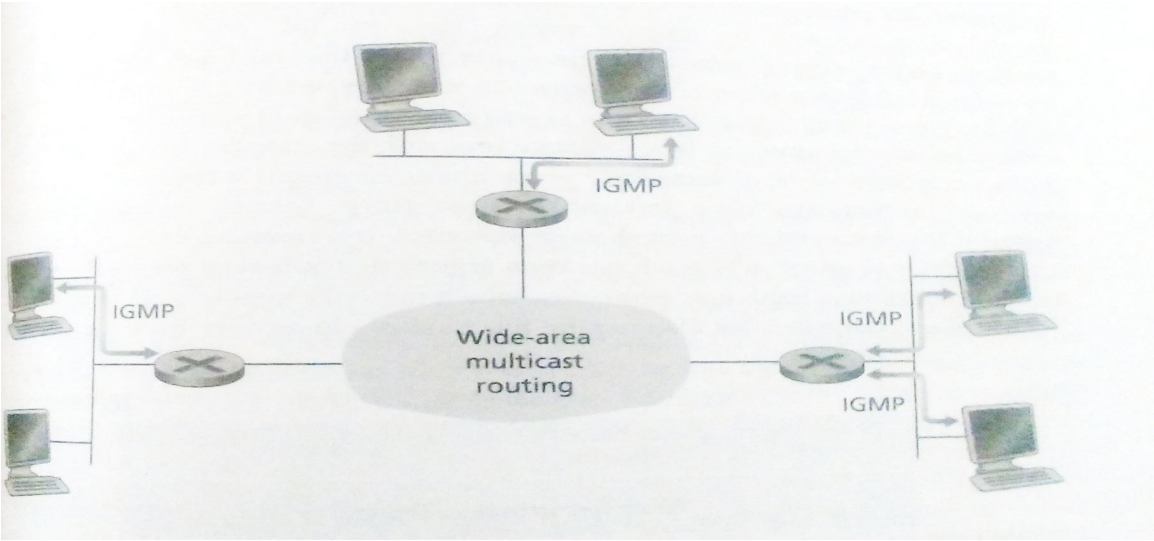

A host or multicast router can have membership in a group. **When a host has membership, it means that one of its processes (an application program) receives multicast packets from some group**. **A host or a router can join a group**. A host maintains a list of processes that have membership in a group. **When a process wants to join a new group, it sends its request to the host. The host adds the name of the process and the name of the requested group to its list**. **If this is the first entry** for

this particular group, **the host sends a membership report message.When a host sees that no process is interested in a specific group, it sends a leave report**. Similarly, when **a router** sees that **none** of the networks connected to its interfaces **is interested in** a specific group, it **sends a leave report about that group. The multicast router is responsible for monitoring all the hosts or routers in a LAN to see if they want to continue their membership in a group.**

- Multicast routing using group shared tree
- Multicast routing using a source based tree

Internet Multicast Routing Protocols

- Distance Vector Multicast routing Protocol

✓ Uses distance vector algorithm

- Protocol Independent Multicast (PIM) routing protocol